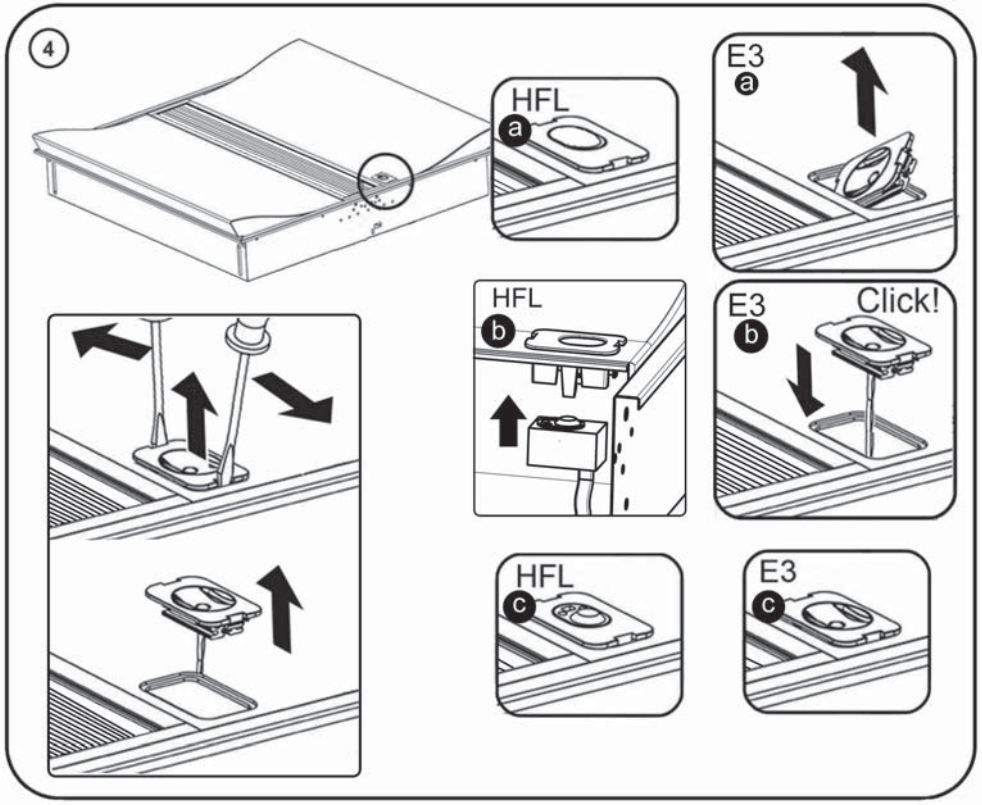

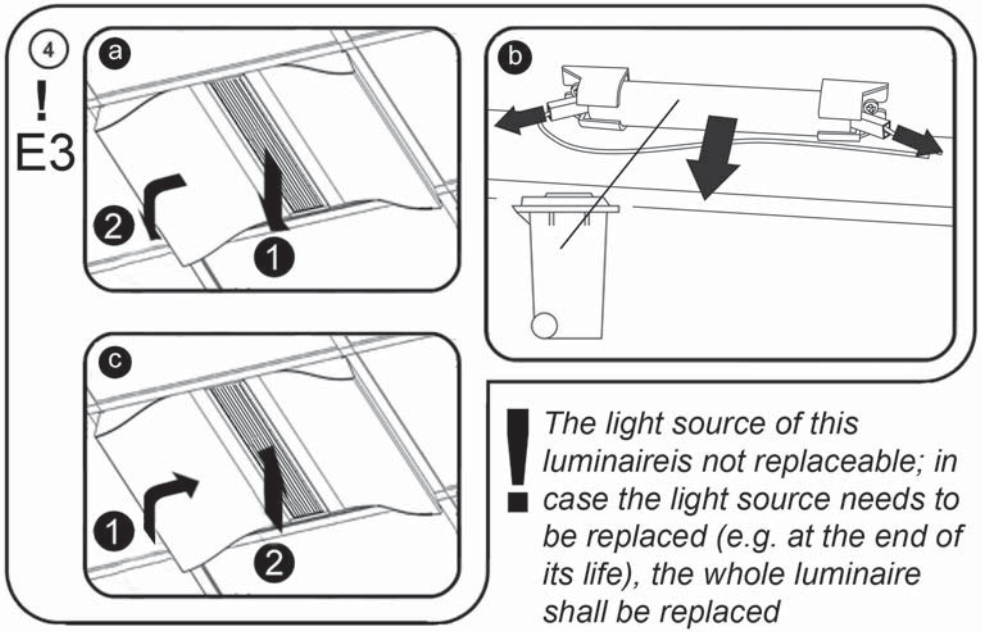

! *The light source of this luminaireis not replaceable; in case the light source needs to be replaced (e.g. at the end of its life), the whole luminaire shall be replaced*

96337205 PA 04/12

THORN

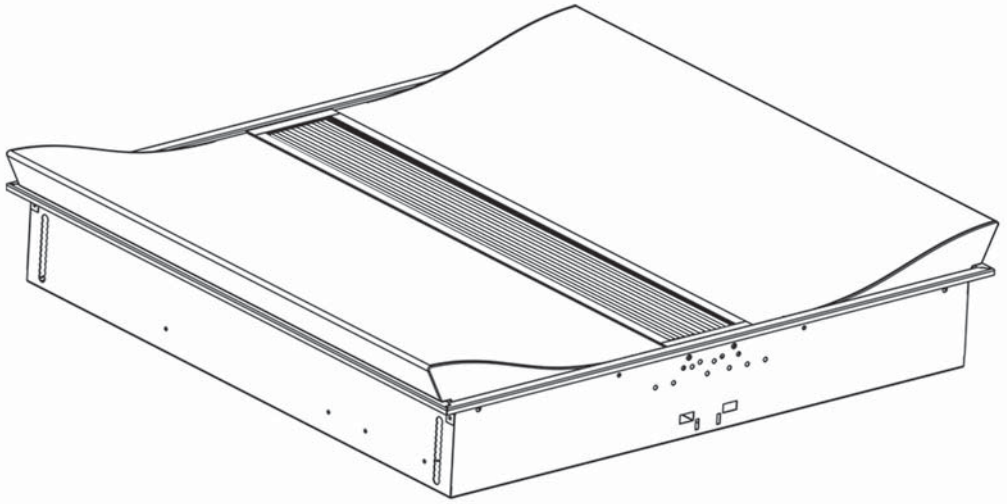

Elevation LED

Class 1 CE

[CZ] Montážní návod
[DE] Montageanleitung
[DK] Monteringsvejledning
[EE] Paigaldusjuhend
[FI] Asennusohje
[FR] Notice de montage
[HU] Szerelési útmutató
[IT] Istuzioni di montaggio
[LT] Montavimo Instrukcijos
[LV] Instalacijas instrukcija
[NO] Monteringsanvisning
[PL] Instrukcja montażu
[RU] Инструкция по монтажу
[SE] Installationsanvisning
[UK] Installation Instructions

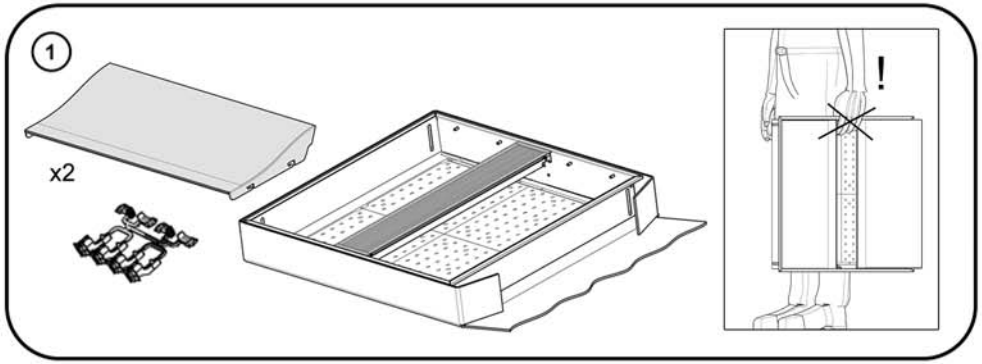
1
x2
!

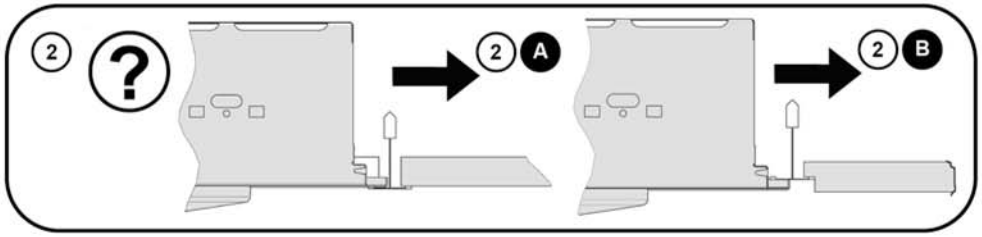
2
?
2 A
2 B

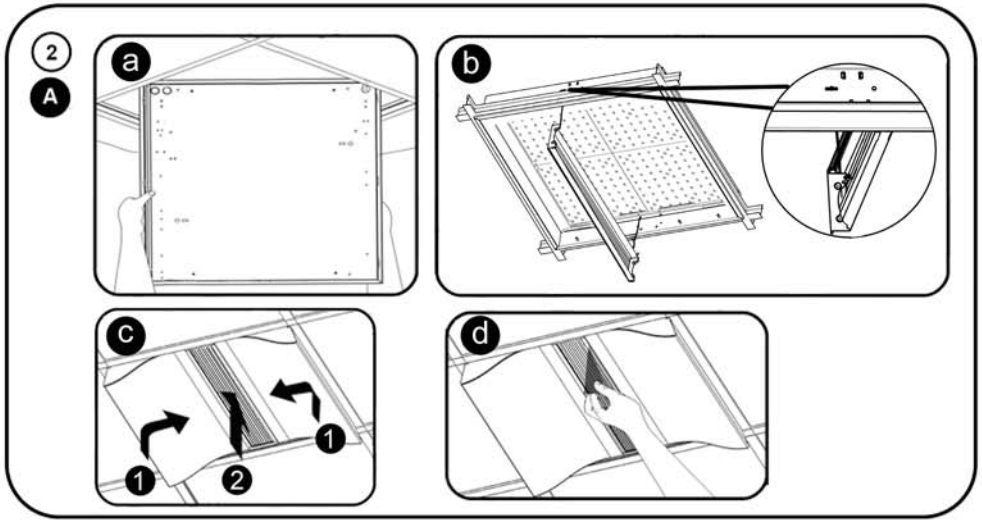
2
A
a
b
c
d
1
2

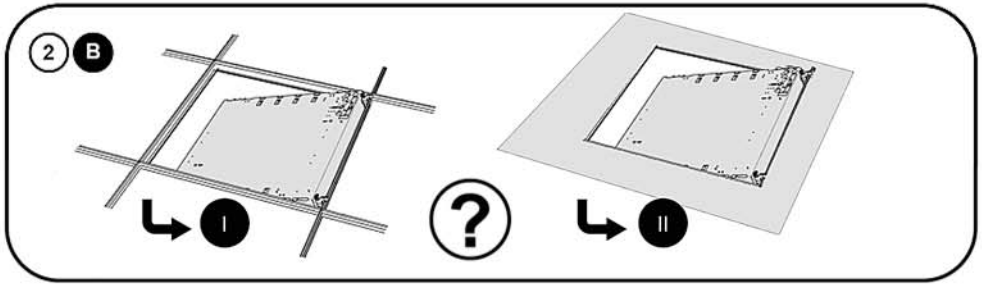
2 B
I
?
II

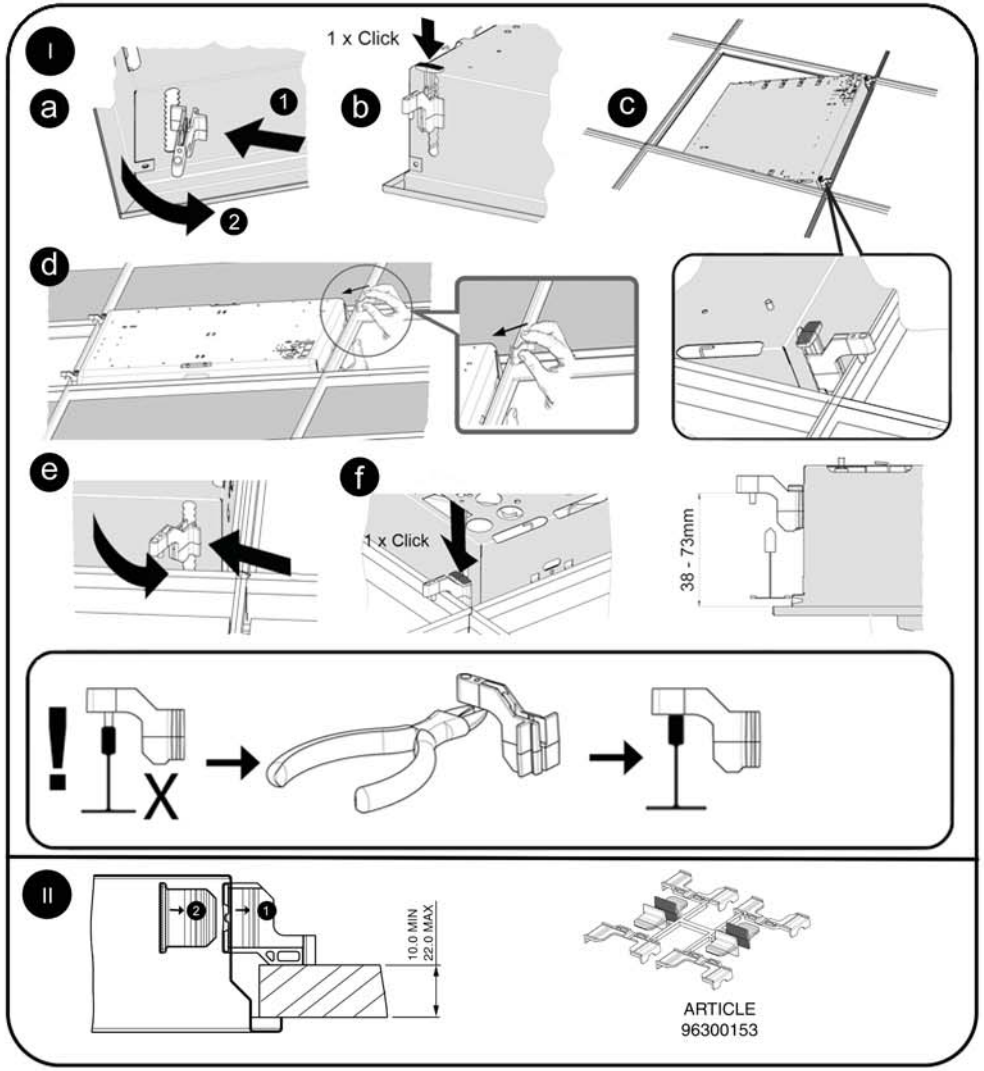
I
a
1
2
1 x Click
b
c
d
e
f
1 x Click
38 - 73mm
!
X
II
2
1
10.0 MIN
22.0 MAX
ARTICLE
96300153

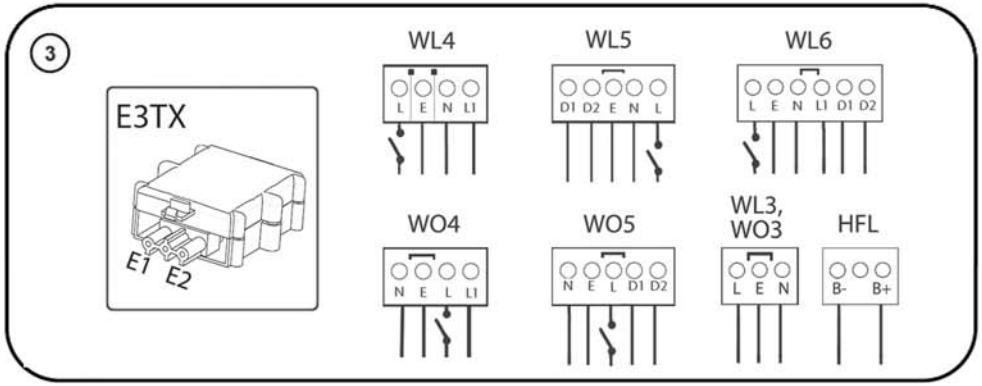
3
E3TX
E1 E2
WL4
L E N L1
WL5
D1 D2 E N L
WL6
L E N L1 D1 D2
WO4
N E L L1
WO5
N E L D1 D2
WL3,
WO3
L E N
HFL
B- B+